Michael Conry 2005 mconry@acronymchile.com

3/91

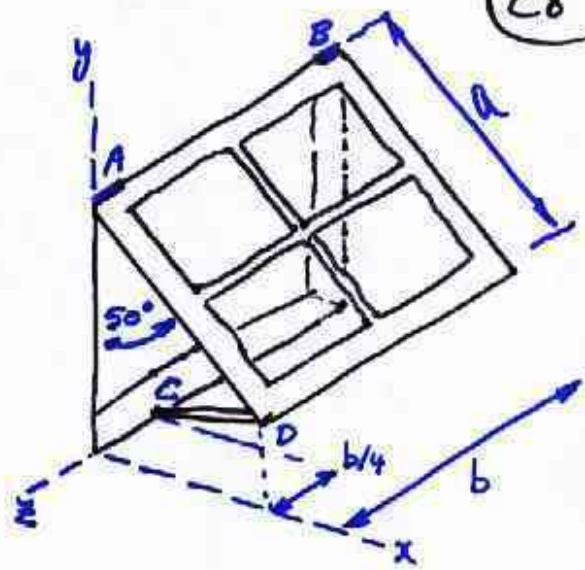

Window propped open by stick CD

$a = 0.8\,m$

$b = 1.2\,m$

mass = 50 kg @ geometric centre

HINGES @ A & @ B

→ A supports thrust

→ B does not.

find compressive force F_{CD} in prop & ALL components of forces in Hinges @ A & B

F.B.D.

Most important STEP

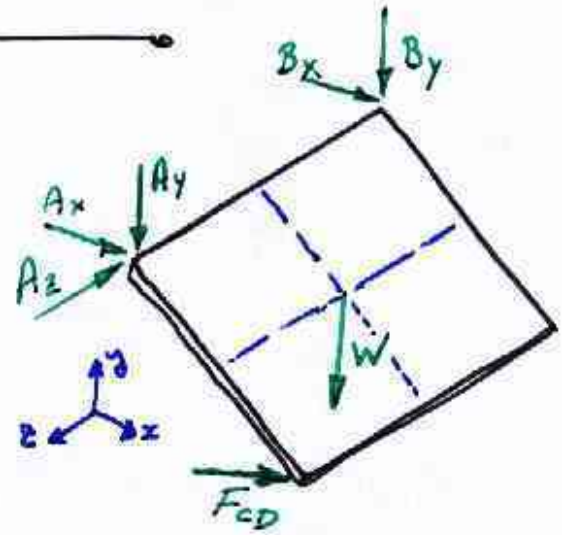

need to get components of $\vec{F}_{CD}$

unit vector // to $\vec{F}_{CD}$ ...

from C → D $\quad a\sin(50°)\hat{i} + a(1-\cos(50°))\hat{j} + \frac{b}{4}\hat{k}$

i.e. $0.613\,\hat{i} + 0.286\,\hat{j} + 0.3\,\hat{k}$

to get unit vector ÷ by $\sqrt{0.613^2 + 0.286^2 + 0.3^2}$

$= 0.740$

$\Rightarrow \vec{F}_{CD} = \|F_{CD}\|(0.828\,\hat{i} + 0.386\,\hat{j} + 0.405\,\hat{k})$